# Appendix II.1

## Recommended Procedure for Microhardness testing of small balls

B1.1 Scope. This procedure is recommended for use on through hardened balls, smaller than 5mm (3/16") in nominal diameter.

B1.2 Sample size. The sample size for this type of test shall be in accordance with table F. Item 3 of this standard.

B1.3 Specimen preparation. That balls shall be mounted in a suitable plastic material such as bakelite, styrene or unfilled epoxy, etc. Mounted balls shall be ground and polished, using matallographic techniques. (ASM Metals Handbook) so as to present a cross section approximately ¼ of the ball radius from the ball center, or approximately 0,25mm (0,010") from the ball center, witchever is the l
esser. See illustration below.

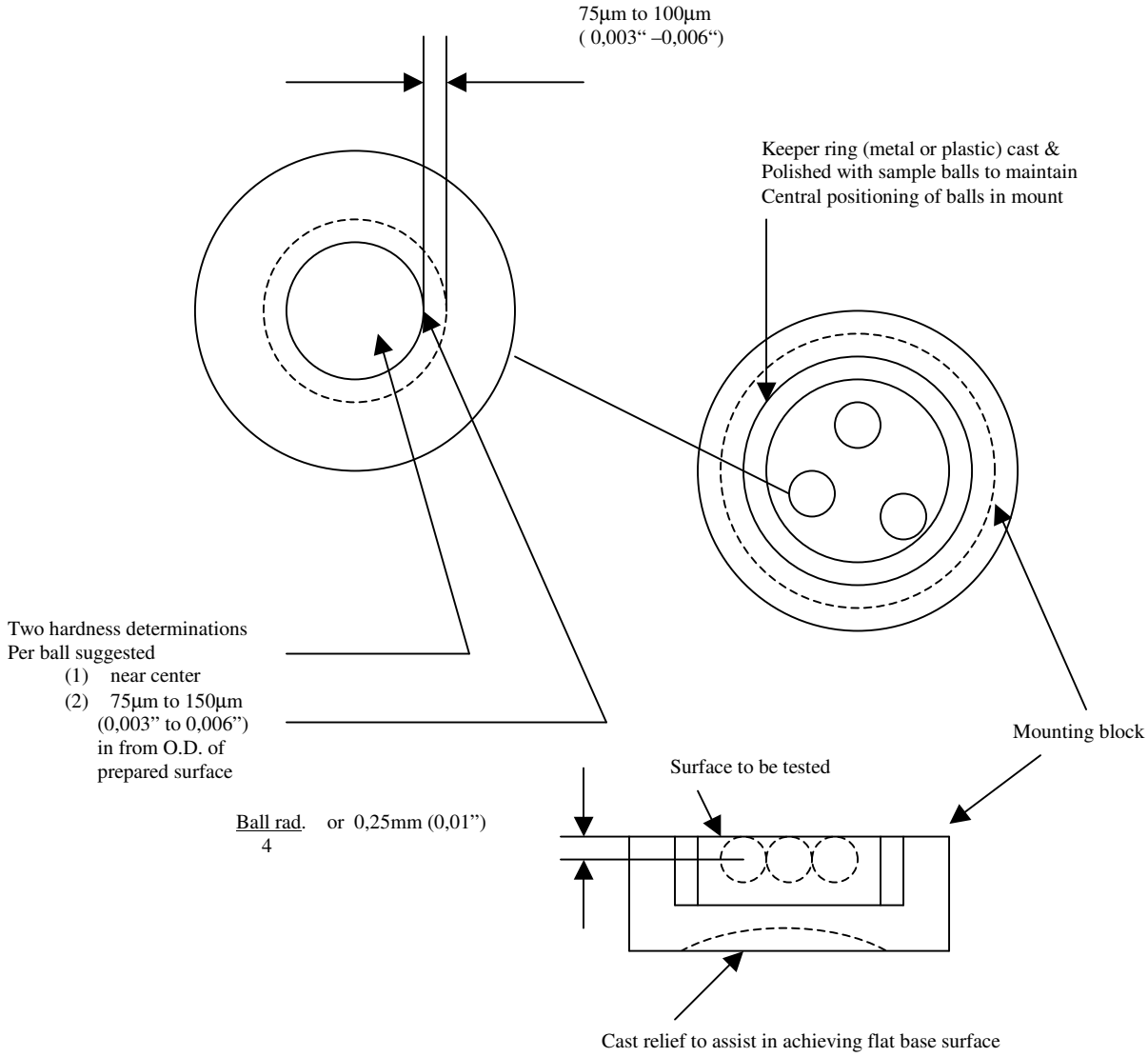


**Figure**
**Suggested method of mounting miniature balls**

**For microhardness testing**

B 1.4 Microhardness Testing. The procudure for hardness testing shall conform to Federal Test Method Std 151, Method 244-1

A minimum oftwo hardness determinations per ball shall be made, one near the center of the prepared surface and one on the same surface at a distance of from 75 to 150 micrometers (0,003” to 0,006”) from the edge of the prepared surface.
A test load of 1,000 grams is recommended for all determinations except that in the size range of 1.2 mm (3/64”) and smaller where a 300 gram load may be required to remain within the adhesion limits of the specimen to the plastic mounting material. Extremely small diameters may require test loads of less than 300 grams, but it must be pointed out that a clean laboratory environment must be assured.
All hardness determinations shall be reported in DPH values including the test load, e.g.;If a hardness determination of 700 DPH is indicated, employing a 300 gram test load, the hardness to be completely defined, shall be reported as 700 DPH (300 gram load).

B 1.5 Reported hardness. The hardness level of a batch of balls shall be arithmetic average of all hardness determinations taken on the sample of any given batch. Hardness determinations shall be reported in DPH values.

B 1.6 Hardness Conversions. Conversions of DPH hardness values to any other hardness system shall be interpreted only as approximations. The accepted reference for conversions shall be ASTM Standards E-140 “Standard Hardness Conversions Tables of Metal”.